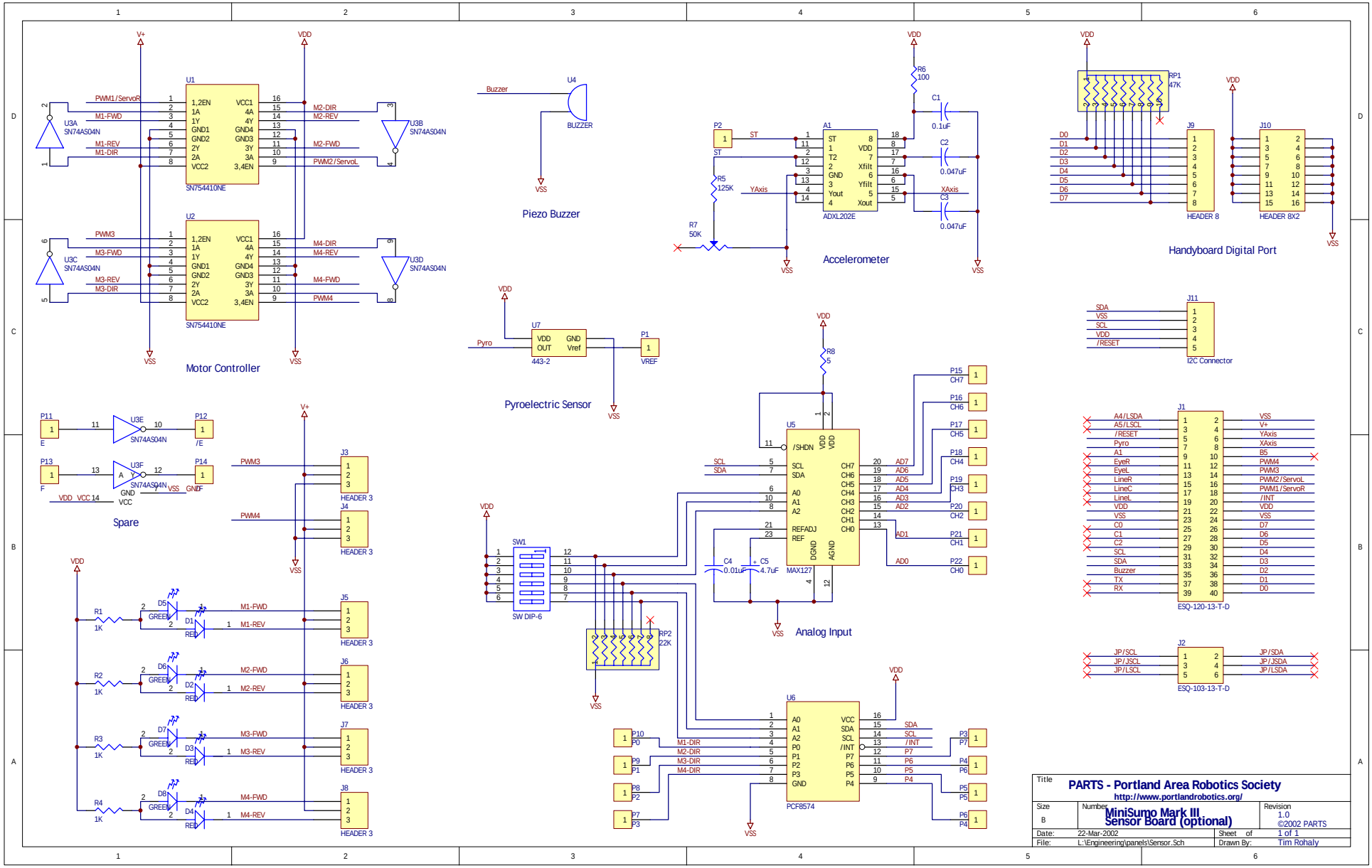
Motor Controller
U1
SN754410NE
U2
SN754410NE
U3A SN74AS04N
U3B SN74AS04N
U3C SN74AS04N
U3D SN74AS04N
PWM1/ServoR
M1-FWD
M1-REV
M1-DIR
M2-DIR
M2-REV
M2-FWD
PWM2/ServoL
PWM3
M3-FWD
M3-REV
M3-DIR
M4-DIR
M4-REV
M4-FWD
PWM4
Piezo Buzzer
U4
BUZZER
Buzzer
Accelerometer
A1
ADXL202E
R6 100
C1 0.1uF
C2 0.047uF
C3 0.047uF
R5 125K
R7 50K
YAxis
XAxis
Handyboard Digital Port
RP1 47K
J9
HEADER 8
J10
HEADER 8X2
Pyroelectric Sensor
U7
443-2
P1
VREF
Pyro
I2C Connector
J11
SDA
VSS
SCL
VDD
/RESET
Spare
P11
P12
P13
P14
U3E SN74AS04N
U3F SN74AS04N
Analog Input
U5
MAX127
R8 5
C4 0.01uF
C5 4.7uF
SW1
SW DIP-6
RP2 22K
U6
PCF8574
ESQ-120-13-T-D
J1
ESQ-103-13-T-D
J2
JP/SCL
JP/JSCL
JP/LSCL
JP/SDA
JP/JSDA
JP/LSDA
HEADER 3
J3
J4
J5
J6
J7
J8
R1 1K
R2 1K
R3 1K
R4 1K
D1 RED
D2 RED
D3 RED
D4 RED
D5 GREEN
D6 GREEN
D7 GREEN
D8 GREEN
Title
PARTS - Portland Area Robotics Society
http://www.portlandrobotics.org/
Size B
Number
MiniSumo Mark III
Sensor Board (optional)
Revision 1.0
©2002 PARTS
Date: 22-Mar-2002
Sheet of 1 of 1
File: L:\Engineering\panels\Sensor.Sch
Drawn By: Tim Rohaly